Computer Network Course Practice

Lab-1 STP Configuration and Verification

CONTENTS

Objectives 2
Required Resources 2
Background 2
Redundant Links and Problems 2
STP 2
Roles in STP 2
STP BPDU 3
STP Port States 3
STP Operation 4
Root Bridge Election and Bridge ID 4
Root Port and Designated Port Selection 4
Path Cost 4
Port ID 5
Lab-1-1: Broadcat Storm Analysis 6
Requirements 6
Steps 6
Lab-1-2: STP Configuration 9
Requirements 9
Steps 9
Lab-1-3: Root Bridge Configuration 13
Requirements 13
Steps 13
Comments 0

OBJECTIVES

1. Connect computers according to the topology diagram.
2. Perform basic configuration tasks on a switch.
3. Understand problems created by redundancy on layer-2 network.
4. Understand the role and working logic of Spanning Tree Protocol (STP, 802.1D).
5. Configure STP, observe and explain the default behavior of STP.
6. Configure root bridge and verify the configuration.
7. Capture and analyze broadcast storm and STP traffic.

REQUIRED RESOURCES

1. Huawei eNSP.
2. ping.
3. Wireshark.

BACKGROUND

Redundant Links and Problems

When multiple paths exist between two devices in a network, a loop may occur. An Ethernet network needs to include loops because they provide redundant paths in case of a link failure. Some of the problems that can occur with redundant links in a switched / bridge network are as follows:

- **Broadcast storms:** Each switch would endlessly flood broadcasts, known as a broadcast storm as a result of a layer 2 loop. This results in the consumption of all available bandwidth on the switch as eventually data cannot be forwarded by the switch.
- **Multiple frame transmissions:** Multiple copies of unicast frames may be delivered to a destination host. This can cause problems if the higher layer protocol is expecting only one copy and cannot handle multiple copies.
- **MAC database instability:** MAC address tables are built by examining the source MAC address on a frame received. The source MAC address is tied to the interface it was received on. If a loop occurs, then the same source MAC address could be seen on multiple interfaces causing instability. Instability of the MAC table causes copies of the same frame to be delivered to multiple ports.

STP

Networks need redundancy to protect the network in case a point fails, however, when redundancy is implemented, the likelihood of layer 2 loops increases. The spanning tree protocol is a solution to the problem of loops. Spanning Tree Protocol (STP), defined in IEEE 802.1D, intelligently avoid loops in a network by creating a tree topology (spanning tree) of the entire bridged/switched network with only one available path between the tree root and a leaf.

Roles in STP

STP defines different roles for bridges and ports as shown in Table 1-1.

Table 1-1 Roles of bridges and ports in STP

Root Bridge	The main switch or bridge in STP and the main reference for best path calculations between bridges/switches throughout the network. it controls the spanning tree topology. The root bridge may be any switch on the network that wins an election process.
Designated Bridges	Switches closest to the root bridge through which the frames will be forwarded to the Root Bridge. There is always one designated port per link.
Root Port	The port that receives the best BPDU that is closest to the root bridge in terms of path cost. The root bridge is the only bridge in the network that does not have a root port.
Designated Port	The port that has the lowest path cost on a particular LAN segment. Each segment has a single port that is used to reach the root bridge called designated port. All ports on the root bridge are designated ports. There can be only one root port on a switch, but a switch can have multiple designated ports.

Non-Designated Port	When STP is fully converged, some ports will be blocked, these are the redundant ports. These ports are the non-designated ports and they can only become active in case of a failure. Non-designated port will be always in blocking state to avoid Layer 2 Switching loops.

STP BPDU

STP uses BPDU (Bridge Protocol Data Units) to transmit information between bridges/switches. A BPDU is a data message transmitted across a LAN to detect loops in network topologies. It contains the information necessary to configure and maintain spanning tree topology, regarding ports, switches, port priority and addresses, control the way STP determines the network topology.

Two important BPDU frames are Configuration BPDU (Config BPDU) and Topology Change Notification BPDU (TCN BPDU). Config BPDUs are sent between bridges to establish a network topology. TCN BPDUs are sent after a topology change has been detected to indicate that the STP algorithm should be initiated.

The BPDU frame information is included in the Data portion of an Ethernet frame. Each BPDU carries several fields (as shown in Table 1-2) in it:

Table 1-2 BPDU fields

Field	Bytes	Description
Protocol Identifier	2	The value is fixed at 0, representing a spanning tree protocol.
Protocol Version Identifier	1	The value is fixed at 0, representing a spanning tree protocol.
BPDU Type	1	Indicates the type of a BPDU. The value is one of the following: 0x00: configuration BPDU. 0x80: TCN BPDU.
Flags	1	Indicates whether the network topology has changed. The rightmost bit is the Topology Change (TC) flag. The leftmost bit is the Topology Change Acknowledgment (TCA) flag.
Root Identifier	8	Indicates the Bridge ID of the current root bridge.
Root Path Cost	4	Indicates the accumulated path cost from a port to the root bridge.
Bridge Identifier	8	Indicates the Bridge ID of the bridge that sends the BPDU.
Port Identifier	2	Indicates the Port ID of the port that sends the BPDU.
Message Age	2	Records the time that has elapsed since the original BPDU was generated on the root bridge. If the configuration BPDU is sent from the root bridge, the Message Age value is 0. Otherwise, the Message Age value is the total time spent to transmit the BPDU from the root bridge to the local bridge, including the transmission delay. The Message Age value of a configuration BPDU increases by 1 each time the configuration BPDU passes through a bridge.
Max Age	2	Indicates the aging time of a BPDU.
Hello Time	2	Indicates the interval at which BPDUs are sent.
Forward Delay	2	Indicates the period during which a port stays in Listening and Learning states.

STP Port States

When the spanning tree is being determined, the ports on the switches transition from various states. On a switch running STP, each port is in one of five states shown in Figure 1-3.

Table1-3 STP Port States

State	Descriptions	Receive BPDU	Send BPDU	Learn MAC address	Forward data frame	Time (seconds)
Blocking	A port in Blocking state receives and processes only BPDUs, and does not forward user traffic. All ports are in this state during switch boot or STP election of the root bridge.	Yes	No	No	No	20
Listening	This is a transitional state. In this state, the port listens to BPDUs to make sure no loops occur on the network before passing data frames. A port in listening state prepares to forward data frames without populating the MAC address table.	Yes	Yes	No	No	15 秒
Learning	This is a transitional state. In this state, the port listens to BPDUs and learns all the paths in the switched network. A port in learning state populates the MAC address table,	Yes	Yes	Yes	No	15 秒

	establishing a loop-free MAC address table, but doesn't forward data frames.					
Forwarding	A port in Forwarding state can forward user traffic and process BPDUs. Only the Root Port and Designated Port can enter this state. This port can also send and receive BPDU frames to determine if there are any topological changes	Yes	Yes	Yes	Yes	
Disabled	A port in Disabled state does not process BPDUs or forward user traffic. when a port is in shutdown mode due to the configuration of an administrator, this is the state it assumes. The port in Disabled state is not in the STP topology.	No	No	No	No	

STP Operation

The process of STP to generate a spanning tree can be summarized as the following three steps:

1. Elect Root Bridge.
2. Select Root Ports on Non-Root bridges.
3. Select Designated Ports on each link or LAN segment.

Only the best path to the Root Bridge remains active. All other paths are blocked. When STP completely converges:

- One Root Bridge per network.
- One Root Port per designated bridge.
- One Designated Port per link or LAN segment.

Root Bridge Election and Bridge ID

With STP, the key is for all the switches in the network to elect a Root Bridge. All other decisions in the network, such as which port to block and which port to put in forwarding mode, are made from the perspective of this root bridge. The Root Bridge may be any switch on the network that wins an election process.

The Root Bridge election is determined by the BID (bridge ID). The switch with the lowest BID becomes the root bridge. BID is the identifier of the switch in the context of STP. It consists of bridge priority (which defaults to 32768) and the MAC address. A lower value means a better value. If the bridge priority is the same, then the tie-breaker will be the MAC address (there cannot be two identical MAC addresses).

Root Port and Designated Port Selection

The following rules are used to determine the Root Port and Designated Port (in order):

1. Lowest root path cost: select the port on the bridge/switch on the network segment with the lowest accumulated STP path cost to the Root Bridge.
2. Lowest sender bridge ID: select the port on the switch with the lowest sender BID if there is a tie in total path cost to Root Bridge.
3. Lowest port ID: select the port on the switch with the lowest port ID if there is a tie at the sender bridge ID level.

Root Port and Designated Port will be in Forwarding state and Non-Designated Port will be in Blocking state.

Path Cost

After the election of the root bridge, the STP will choose the best paths based on the bandwidth on the links or the cost. Internal path cost is determined by summing up the individual port costs along the path from the switch to the root bridge.

The path cost value is inversely proportional to the associated bandwidth of the path and therefore a path with a low cost value is more preferable than a path with high cost value.

Huawei switches support three port cost methods: Huawei (legacy), IEEE 802.1d (dot1d-1998) and IEEE 802.1t (dot1t). Refer to Table 1-4, 1-5 and 1-6 for default and recommended port cost values of these three methods.

Table 1-4 Huawei (legacy) Port Cost

Link Speed (Bandwidth)	Default	Range Recommended	Range allowed
10 Mbit/s	2,000	200 - 20,000	1 - 200,000
100 Mbit/s	200	20 - 2000	1 - 200,000
1 Gbit/s	20	2 - 200	1 - 200,000
10 Gbit/s	2	2 - 20	1 - 200,000
10 Gbit/s above	1	1 - 2	1 - 200,000

Table 1-5 IEEE 802.1d (dot1d-1998) Port Cost

Link Speed (Bandwidth)	Default	Range Recommended	Range allowed
10 Mbit/s	100	50 - 600	1-65,535
100 Mbit/s	19	10 - 60	1-65,535
1 Gbit/s	4	3 - 10	1-65,535
10 Gbit/s	2	1 - 5	1-65,535

Table 1-6 IEEE 802.1t (dot1t) Port Cost

Link Speed (Bandwidth)	Default	Range Recommended	Range allowed
10 Mbit/s	2,000,000	200,000 - 20,000,000	1 - 200,000,000
100 Mbit/s	200,000	20,000 - 2,000,000	1 - 200,000,000
1 Gbit/s	20,000	2,000 - 200,000	1 - 200,000,000
10 Gbit/s	2,000	200 - 20,000	1 - 200,000,000
100 Gbit/s	200	20 - 2,000	1 - 200,000,000
1 Tbit/s	20	2 - 200	1 - 200,000,000
10 Tbit/s	2	1 - 20	1 - 200,000,000

Port ID

Port ID is a determining factor when selecting the Root Port and Designated Port. Port ID is used as the final tie breaker, and consists of two components: 4-bit port priority value (which defaults to 128) and 12-bit port number, derived from the physical port number.

Normally, a Port ID is denoted in Hexadecimals similar as 0x8005, which is equivalent to 128.05 in decimals, where the first part is the default port priority value and second part is the switch interface identifier. A lower value means a better value.

LAB-1-1: BROADCAT STORM AND MAC ADDRESS TABLE INSTABILITY ANALYSIS

Requirements

A switched Ethernet LAN topology is shown in Figure 1-1. To improve reliability, two links are used to interconnect the two S5700 switches LSW1 and LSW2. Analyze if there will be broadcast storms and MAC address table instability problems when STP is disabled on the switches.

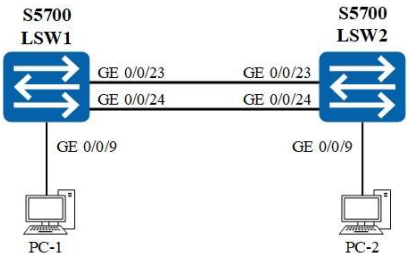

Figure 1-1 A switched Ethernet LAN

The IPv4 address allocation are shown in Table 1-7.

Table 1-7 IPv4Address Allocation

	IPv4 Address	Mask
PC-1	192.168.100.19	255.255.255.0
PC-2	192.168.100.29	255.255.255.0

Steps

Step 1: Create the topology, cable a network.

1. Start eNSP and click the "New Topology" icon in the toolbar.
2. Add two S5700 switches and two PCs to the blank work area.
3. Connect each switch and PC according to the designated port.
4. Name the switches and PCs.

Step 2: Assign the IPv4 address and subnet mask for PCs.

1. Double-click each PC, select the "Basic Config" tab in the pop-up window, and configure the IPv4 address and subnet mask for it.
2. After configuration, click the "Save" icon in the toolbar to save the topology to the specified directory, and name the topology file **lab-1-1 STP.BroadcastStorm.topo**.

Step 3: Start devices.

Click the " Start Device" icon in the toolbar to start all devices.

Step 4: Disable STP.

By default, STP on each switch is enabled, and the STP mode is set to mstp.

1. Disable STP on the switch LSW1.

Double-click the icon of switch LSW1 in the work area to open the switch configuration window, then enter the following commands (# indicates that this line is a comment line, no need to enter):

```
# enter the system view
<huawei> system-view
# set the device name
[huawei] sysname LSW1
# disable STP
[LSW1] stp disable
```

```
# display STP status of switch and interfaces
[LSW1] display stp
[LSW1] display stp brief
# display MAC address table
[LSW1] display mac-address
# display cpu-usage
[LSW1] display cpu-usage
```

2. Disable STP on the switch LSW2.

Double-click the icon of switch LSW2 in the work area to open the switch configuration window.

```
# enter the system view
<huawei> system-view
# set the device name
[huawei] sysname LSW2
[LSW2] stp disable
[LSW2] display stp
[LSW2] display stp brief
[LSW2] display mac-address
[LSW2] display cpu-usage
```

Step 5: Broadcast storm analysis.

eNSP uses Wireshark to capture data packets.

1. Start data capture.

Right-click a switch, choose “Capture Data” from the shortcut menu, and select an interface to start Wireshark to capture packets. Assume that data capture is enabled on interface GE 0/0/24 on switch LSW1.

After Wireshark is started, set the capture filter to icmp as in Figure 1-2.

Figure 1-2 Set Wireshark capture filter to icmp

2. Generate communication.

Double-click PC-1, select the "Command" tab in the pop-up window, enter the following command. –c indicates how many times to ping. For example,

```
ping 192.168.100.29 -c 1
```

Answer the following questions:

Q1-1.1. Paste the screenshot of the created topology.

Q1-1.2. Have you observed broadcast storm in Wireshark? What is the phenomenon of broadcast storm? Please paste the screenshot of the broadcast storm communications in Wireshark and mark the broadcast storm communications in it.

Q1-1.3. Wait for a while, then view the log information output by the switch LSW1 and LSW2 in the configuration window. Are the CPUs of LSW1 and LSW2 overloaded? What are the CPU usages of the two switches?

Step 6: MAC address table instability analysis.

View the log information output by the switch LSW1 and LSW2 in the configuration window.

Answer the following questions:

Q1-1.4. Which MAC address is reported being flapping on the switch LSW1? On which ports does the MAC address flap? Paste the screenshot of the report in the log.

LAB-1-2: STP CONFIGURATION

Requirements

A switched Ethernet LAN topology is shown in Figure 1-3. Three S5700 switches LSW1, LSW2, and LSW3 are interconnected into a ring, and redundant links are added. To prevent layer-2 loops, STP needs to be enabled on the switches. Please configure STP and check the status of STP spanning tree to ensure that broadcast storms and MAC address table instability will not occur.

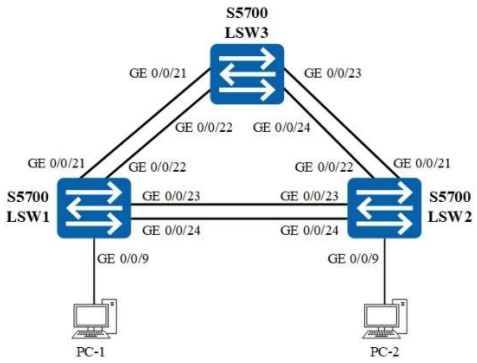

Figure 1-3 Three switches interconnected by redundant links

The IPv4 address allocation are shown in Table 1-8.

Table 1-8 IPv4Address Allocation

	IPv4 Address	Mask
PC-1	192.168.100.19	255.255.255.0
PC-2	192.168.100.29	255.255.255.0

Steps

Step 1: Create the topology, cable a network.

1. Start eNSP and click the "New Topology" icon in the toolbar.
2. Add three S5700 switches and two PCs to the blank work area.
3. Connect each switch and PC according to the designated port.
4. Name the switches and PCs.

Step 2: Assign the IPv4 address and subnet mask for PCs.

1. Double-click each PC, select the "Basic Config" tab in the pop-up window, and configure the IPv4 address and subnet mask for it.
2. After configuration, click the "Save" icon in the toolbar to save the topology to the specified directory, and name the topology file **lab-1-2 STP.topo**.

Step 3: Start devices.

Click the " Start Device" icon in the toolbar to start all devices.

Step 4: Start data capture.

Start data capture on interfaces GE 0/0/21, GE 0/0/22, GE 0/0/23 and GE 0/0/24 on switch LSW1. After Wireshark is started, set the capture filter to stp.

Step 5: Enable STP.

By default, STP on each switch is enabled, but the STP mode is set to mstp. Need to set STP mode to stp.

1. Enable STP on the switch LSW1.

Double-click the icon of switch LSW1 in the work area to open the switch configuration window, then enter the following commands:

```
# enter the system view
<huawei> system-view
# set the device name
[huawei] sysname LSW1
# enable STP
[LSW1] stp enable
# set STP mode. The mode can be stp, rstp and mstp
[LSW1] stp mode stp
```

2. Enable STP on the switch LSW2 and LSW3.

Enable STP on switches LSW2 and LSW3 in the same way as enabling STP on switch LSW1. Note: Set different names for these switches.

Step 6: Examine STP status.

You can display STP status on each switch. The following commands display the STP status on switch LSW1. You can use these commands to display the STP status on the switches LSW2 and LSW3.

```
# display STP status of switch and interfaces
[LSW1] display stp
[LSW1] display stp brief
# display STP status of the interface GE 0/0/21
[LSW1] display stp interface gigabitethernet 0/0/21
[LSW1] display stp interface gigabitethernet 0/0/21 brief
# display MAC address table
[LSW1] display mac-address
# display STP topology change information
[LSW1] display stp topology-change
# display statistics of sent and received topology change (TC) and topology change notification (TCN) BPDUs on interfaces.
[LSW1] display stp tc-bpdu statistics
# display cpu-usage
[LSW1] display cpu-usage
```

Answer the following questions:

Q1-2.1. Paste the screenshot of the created topology.

Q1-2.2. Fill in Tables 1-9, 1-10, and 1-11 based on the STP status output of each switch and its ports.

Table 1-9 STP Status and Roles on switch LSW1

Bridge ID			☐ Root Bridge	☐ Designated Bridge
Bridge ID priority				
Switch MAC Address				
Interface	STP Role	STP Status	Port ID	Path Cost
GE 0/0/9				
GE 0/0/21				
GE 0/0/22				
GE 0/0/23				
GE 0/0/24				

Table 1-10 STP Status and Roles on switch LSW2

Bridge ID			☐ Root Bridge	☐ Designated Bridge
Bridge ID priority				
Switch MAC Address				
Interface	STP Role	STP Status	Port ID	Path Cost
GE 0/0/9				
GE 0/0/21				
GE 0/0/22				
GE 0/0/23				
GE 0/0/24				

Table 1-11 STP Status and Roles on switch LSW3

Bridge ID			☐ Root Bridge	☐ Designated Bridge
Bridge ID priority				
Switch MAC Address				
Interface	STP Role	STP Status	Port ID	Path Cost
GE 0/0/9				
GE 0/0/21				
GE 0/0/22				
GE 0/0/23				
GE 0/0/24				

Q1-2.3. Draw the spanning tree of this network and mark the root bridge, designated bridge, root port, and designated port.

Step 7: BPDU analysis.

Analyze the captured STP BPDUs on the interface GE 0/0/21 on the switch LSW1.

Answer the following questions:

Q1-2.4. How many types of BPDUs are captured?

Q1-2.5. A BPDU is encapsulated in an Ethernet frame. What is the destination MAC address of the frame encapsulating these BPDUs?

Q1-2.6. Expand the Topology Change Notification BPDU in Wireshark, and paste the screenshot of this expanded BPDU. From which interface of which switch is the BPDU sent? Is the switch the Root Bridge? Is the interface the Root Port? To which switch is this notification sent?

Q1-2.7. Expand the Configuration BPDU indicating topology change in Wireshark, and paste the screenshot of this expanded BPDU. Which type of switch can send this type of BPDU, Root Bridge or Non-Root Bridge?

Q1-2.8. Expand the Configuration BPDU indicating topology change acknowledgement in Wireshark, and paste the screenshot of this expanded BPDU. Which type of switch can send this type of BPDU, Root Bridge or Non-Root Bridge?

Q1-2.9. After STP is converged, what are the majority of BPDUs? Is the topology change and topology change acknowledgement flag set?

Q1-2.10. Describe how TCN BPDUs work with Configuration BPDUs.

Step 8: Broadcast storm analysis.

Double-click PC-1, select the "Command" tab in the pop-up window, enter the following command. –c indicates how many times to ping.

```
ping 192.168.100.29 -c 1
```

Analyze the captured ping traffic on interfaces on switch LSW1.

Answer the following questions:

Q1-2.11. Have you observed broadcast storm in Wireshark?

Q1-2.12. On which ports of the switch have you captured the ping communication?

LAB-1-3: ROOT BRIDGE CONFIGURATION

In some cases, we need to configure the Root Bridge to ensure that no matter the switch that joins the network, the initial Root Bridge will remain. To achieve this, just simply configure the Bridge Priority so that it is always smaller than the priority of other switches.

Requirements

A switched Ethernet LAN topology is shown in Figure 1-4, which is the same as in lab-1-2. Enable STP on the switch to prevent loops, and configure the switch LSW3 as the root bridge.

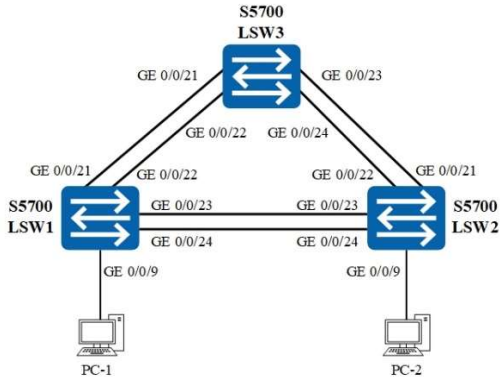

Figure 1-4 Three switches interconnected by redundant links

The IPv4 address allocation is shown in Table 1-12, which is the same as in lab-1-2.

Table 1-12 IPv4Address Allocation

	IPv4 Address	Mask
PC-1	192.168.100.19	255.255.255.0
PC-2	192.168.100.29	255.255.255.0

Steps

Step 1: Load the topology.

1. Start eNSP and click the "Open" icon in the toolbar, and load the topology file **lab-1-2 STP.topo** saved in lab-1-2.
2. Check and make sure the settings of the IP address and subnet mask of each PC match the address allocation.
3. Click the "Save As" icon in the toolbar to save the topology as **lab-1-3 STP.RootBridge.topo**.

Step 2: Start devices.

Click the " Start Device" icon in the toolbar to start all devices.

Step 3: Configure STP.

1. Enable STP on the switch LSW3 and Configure it as the Root Bridge.

Double-click the icon of switch LSW3 in the work area to open the switch configuration window, then enter the following commands:

```
<huawei> system-view
[huawei] sysname LSW3
# enable STP
[LSW1] stp enable
# set STP mode. The mode can be stp, rstp and mstp
[LSW3] stp mode stp
```

```
# configure the Bridge Priority so that it is always smaller than the priority of other switches.
[LSW3] stp priority 4096
```

2. Enable STP on the switch LSW1 and LSW2.

Double-click the icon of switch LSW1 in the work area to open the switch configuration window, then enter the following commands:

```
# enter the system view
<huawei> system-view
[huawei] sysname LSW1
[LSW1] stp enable
# set STP mode. The mode can be stp, rstp and mstp.
# By default, STP on each switch is enabled, and its mode is set to mstp.
[LSW1] stp mode stp
```

Enable STP on switch LSW2.

```
# enter the system view
<huawei> system-view
[huawei] sysname LSW2
[LSW2] stp enable
# set STP mode. The mode can be stp, rstp and mstp.
# By default, STP on each switch is enabled, and its mode is set to mstp.
[LSW2] stp mode stp
```

Step 4: Examine STP status.

The following commands display the STP status on switch LSW1. You can use these commands to display the STP status on the switches LSW2 and LSW3.

```
# display STP status of switch and interfaces
[LSW1] display stp
[LSW1] display stp brief
# display STP status of the interface GE 0/0/21
[LSW1] display stp interface gigabitethernet 0/0/21
[LSW1] display stp interface gigabitethernet 0/0/21 brief
# display MAC address table
[LSW1] display mac-address
# display STP topology change information
[LSW1] display stp topology-change
# display statistics of sent and received topology change (TC) and topology change notification (TCN) BPDUs on interfaces.
[LSW1] display stp tc-bpdu statistics
# display cpu-usage
[LSW1] display cpu-usage
```

Answer the following questions:

Q1-3.1. Paste the screenshot of the created topology.

Q1-3.2. Fill in Tables 1-13, 1-14, and 1-15 based on the STP status output of each switch and its ports.

Table 1-13 STP Status and Roles on switch LSW1

Bridge ID			☐ Root Bridge	☐ Designated Bridge
Bridge ID priority				
Switch MAC Address				
Interface	STP Role	STP Status	Port ID	Path Cost
GE 0/0/9				
GE 0/0/21				
GE 0/0/22				
GE 0/0/23				
GE 0/0/24				

Table 1-14 STP Status and Roles on switch LSW2

Bridge ID			☐ Root Bridge	☐ Designated Bridge
Bridge ID priority				
Switch MAC Address				
Interface	STP Role	STP Status	Port ID	Path Cost
GE 0/0/9				
GE 0/0/21				
GE 0/0/22				
GE 0/0/23				
GE 0/0/24				

Table 1-15 STP Status and Roles on switch LSW3

Bridge ID			☐ Root Bridge	☐ Designated Bridge
Bridge ID priority				
Switch MAC Address				
Interface	STP Role	STP Status	Port ID	Path Cost
GE 0/0/9				
GE 0/0/21				
GE 0/0/22				
GE 0/0/23				
GE 0/0/24				

Q1-3.3. Draw the spanning tree of the network and mark the root bridge, designated bridge, root port, and designated port.

COMMENTS

Your comments and/or suggestions on this lab: